Spare Parts Catalogue

LKB

LKB 2070 UltroRac® II

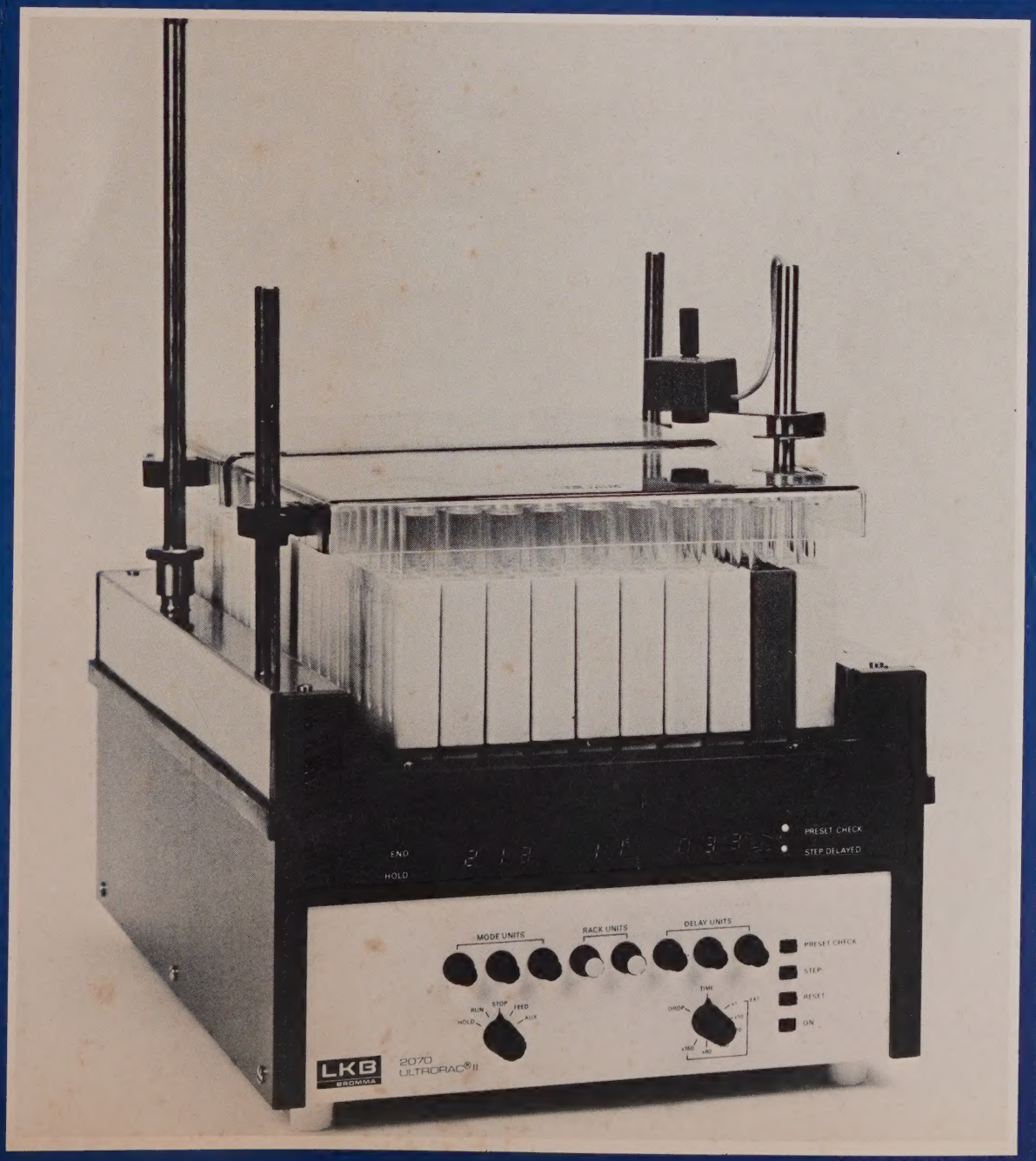

90003249 - E02

GENERAL

THIS SPARE PARTS CATALOGUE DESCRIBES YOUR NEW LKB INSTRUMENT BY MEANS OF DRAWINGS AND PHOTOGRAPHS. IT ENABLES YOU TO FIND THE ORDER NUMBER FOR THE ITEMS THAT YOU MAY REQUIRE.

USUALLY THE LKB SERVICE STATIONS CAN SUPPLY YOU WITH MOST OF THESE SPARE PARTS. CERTAIN PARTS MAY HAVE TO BE ORDERED FROM LKB BROMMA. USUALLY DELIVERY TIMES ARE VERY SHORT.

LKB GUARANTEES THE FUNCTION OF YOUR NEW INSTRUMENT. THE TERMS OF THE GUARANTEE ARE GIVEN IN THE PURCHASE CONTRACT. THIS GUARANTEE IS ONLY VALID IF SERVICE IS PROVIDED BY LKB AND IF LKB PARTS ARE USED.

SINCE PRODUCT DEVELOPMENT AND IMPROVEMENT IS A CONTINOUS PROCESS, LKB RESERVES THE RIGHT TO MAKE CHANGES IN THE SPECIFCATIONS WITHOUT NOTICE.

HOW TO USE THE CATALOGUE

1. Using the Index, locate the figure where the wanted part is shown.

2. Locate the part and its Item No.

3. Turn to the Parts List and note the Part No and Description which correspond to the Item No. Always state the Part No when ordering Spare Parts.

4. The following information can be found under "DIAGRAM No":

   Designations of electrical components on the circuit drawings.

5. If there is something in this catalogue that you think should be clarified or corrected, we would be very grateful for your help. Please use the last page of the catalogue as notification and forward it to

   LKB-PRODUKTER AB
   Research Instruments
   S-161 25 BROMMA 1
   Sweden

INDEX

Fig.		Page
1	UPPER PART	4
2	LOWER PART	6
3	FRONT PANEL	8
4	PUSHER , STEP MECANISM	10
5	INTERCONNECTION BOARD	12
6	REAR PANEL	14
7	ACCESSORIES	17

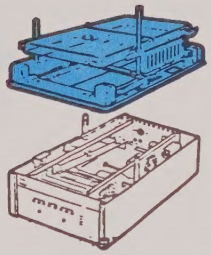

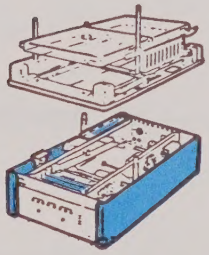

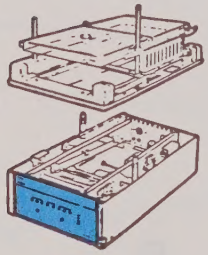

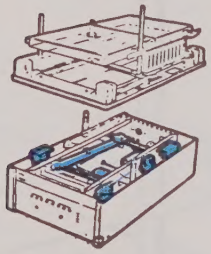

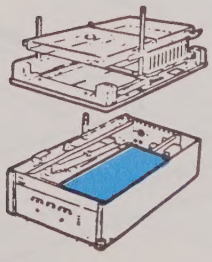

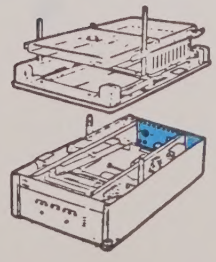

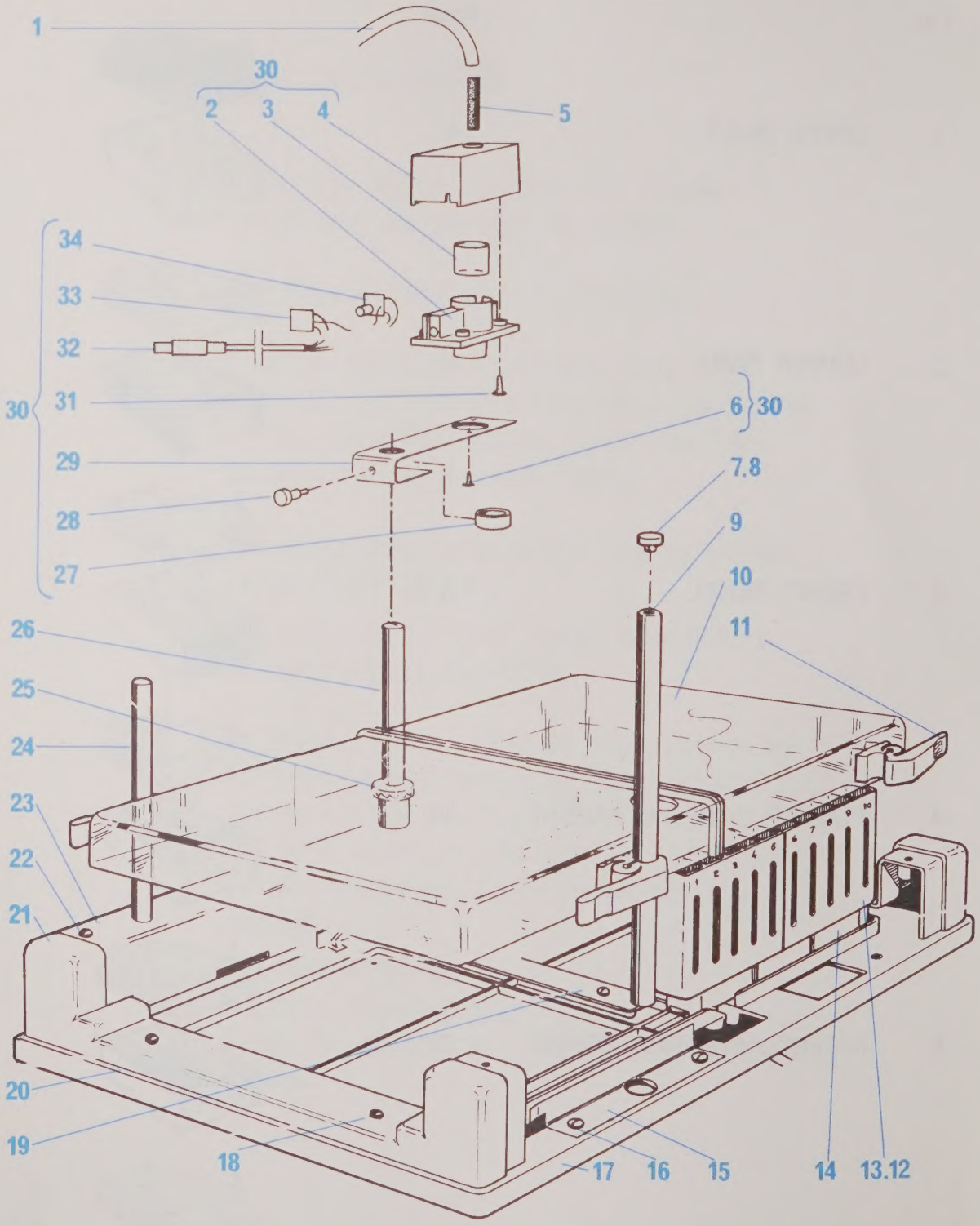
1
30
2
3
4
5
34
33
32
30
31
6
30
29
7.8
28
9
27
10
26
11
25
24
23
22
21
20
19
18
17
16
15
14
13.12

Fig.1

UPPER PART

2070-001

ITEM	PARTNO	DESCRIPTION	SUPPLEMENTARY INFORMATION
001	2030-922	TEFLON TUBING	
002	90 00 1312	HOUSING	
003	90 00 1872	TUBE	
004	90 00 1313	HOOD	
005	90 01 0385	DROP NOZZLE	
006	95 27 0312	SCREW CSK B2X6	
007	95 27 0897	THREAD	
008	90 00 2509	STOP SCREW FOR ROD	
009	90 00 2508	APPARATUS MAST	
010	7007	DUST COVER	
011	94 91 2068	CLAMP	
012	7005-1	TUBE RACK	
013	7005-2	TUBE RACK	
014	7006	RACK CARRIER	
015	94 92 3491	SUPPORT BRACKET	
016	95 27 0125	SCREW LKCS 4X6	
017	90 00 1725	COLLECTING PLATFORM	
018	94 91 2106	SCREW	
019	93 90 2395	CENTER CROSS BAR	
020	90 01 0843	TOP SLIDE TRACK	
021	94 91 6568	END CROSS PIECE	
022	94 91 1970	SCREW	
023	92 90 1768	CHAIN GUARD	
024	7009	ROD	
025	94 91 1409	NUT	
026	90 00 1769	ROD FOR DROP COUNTER	
027	90 00 1992	LOCKING RING	
028	94 91 5160	LOCKING SCREW	
029	90 00 1991	ARM	
030	90 00 2317	DROPCOUNTER COMPL	
031	95 27 0314	SCREW B4X10	
032	90 00 2321	CABLE COMPL	
033	95 80 0118	PHOTOTRANSISTOR 2B50	V1
034	95 78 0178	ZENER DIODE 7.5V	V2

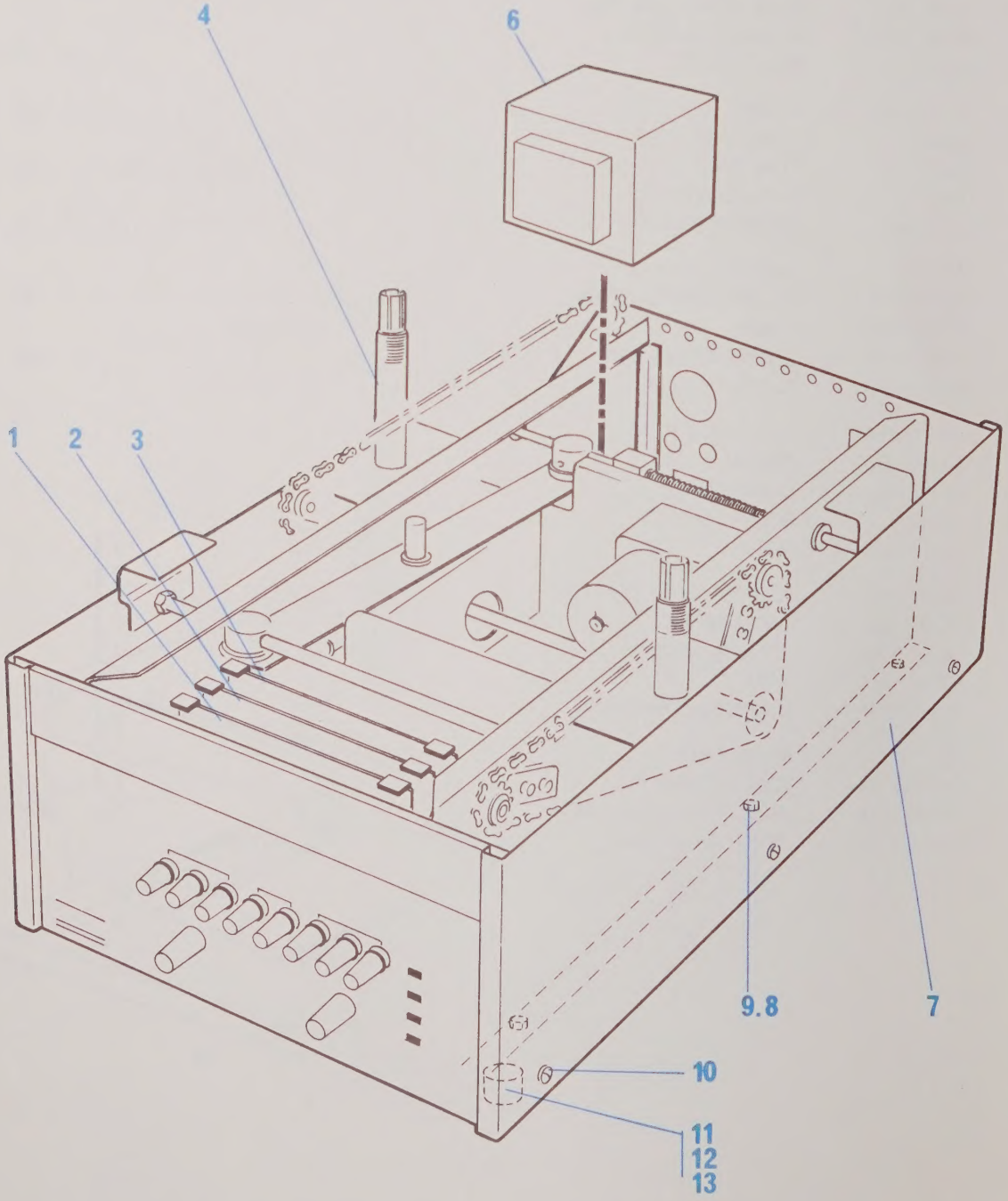

Fig. 2

LOWER PART

2070-002

ITEM	PARTNO	DESCRIPTION	SUPPLEMENTARY INFORMATION
001	90 00 1694	PC-BOARD1	
002	90 00 1736	PC-BOARD2	
003	90 00 1738	PC-BOARD3	
004	94 91 1408	TUBE	
006	95 65 0056	TRANSFORMER	T1
007	90 00 1529	SIDE COVER	
008	95 27 0074	SCREW MCS 5X8	
009	95 27 0358	NUT M6M5	
010	95 27 0124	SCREW LKCS 4X5	
011	94 91 1424	FOOT	
012	95 27 0061	SCREW MCS 4X12	
013	95 27 0356	NUT M6M4	

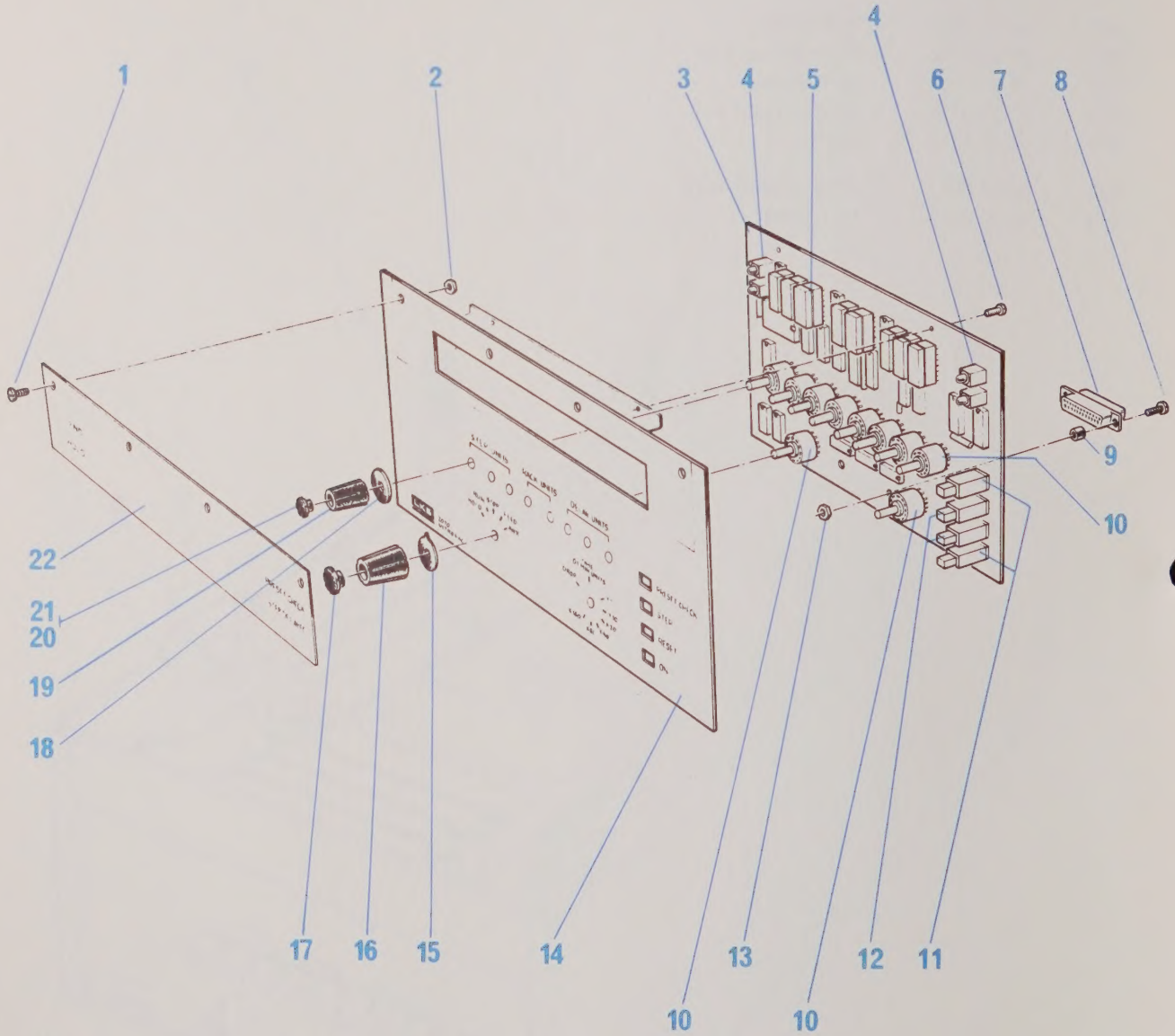

Fig.3

FRONT PANEL

2070-003

ITEM	PARTNO	DESCRIPTION	SUPPLEMENTARY INFORMATION
001	95 27 0117	SCREW LKCS 3X8	
002	95 27 0815	NUT B6LM3	
003	90 00 1472	PC-BOARD	
004	95 78 0191	LED RED	H9-H12
005	95 76 0041	DISPLAY 7-SEGM	H1-H8
006	95 27 0030	SCREW MCS 3X6	
007	95 86 0503	CONNECTION	X1
008	95 27 0037	SCREW MCS 3X12	
009	90 00 1776	SPACER	
010	95 84 0206	SWITCH	S1-S10
011	95 84 0199	PUSH BUTTON SWITCH	S11,14
012	95 84 0209	SWITCH TRY 2P	S12,13
013	95 27 0354	NUT M6M3	
014	90 00 1515	FRONT PANEL	
015	95 37 0146	WASHER	
016	95 37 0170	KNOB	
017	95 37 0135	CAP	
018	95 37 0157	WASHER	
019	95 37 0150	KNOB	
020	95 37 0134	CAP, BLACK	
021	95 37 0177	CAP, GRAY	
022	90 00 1521	FILTER	

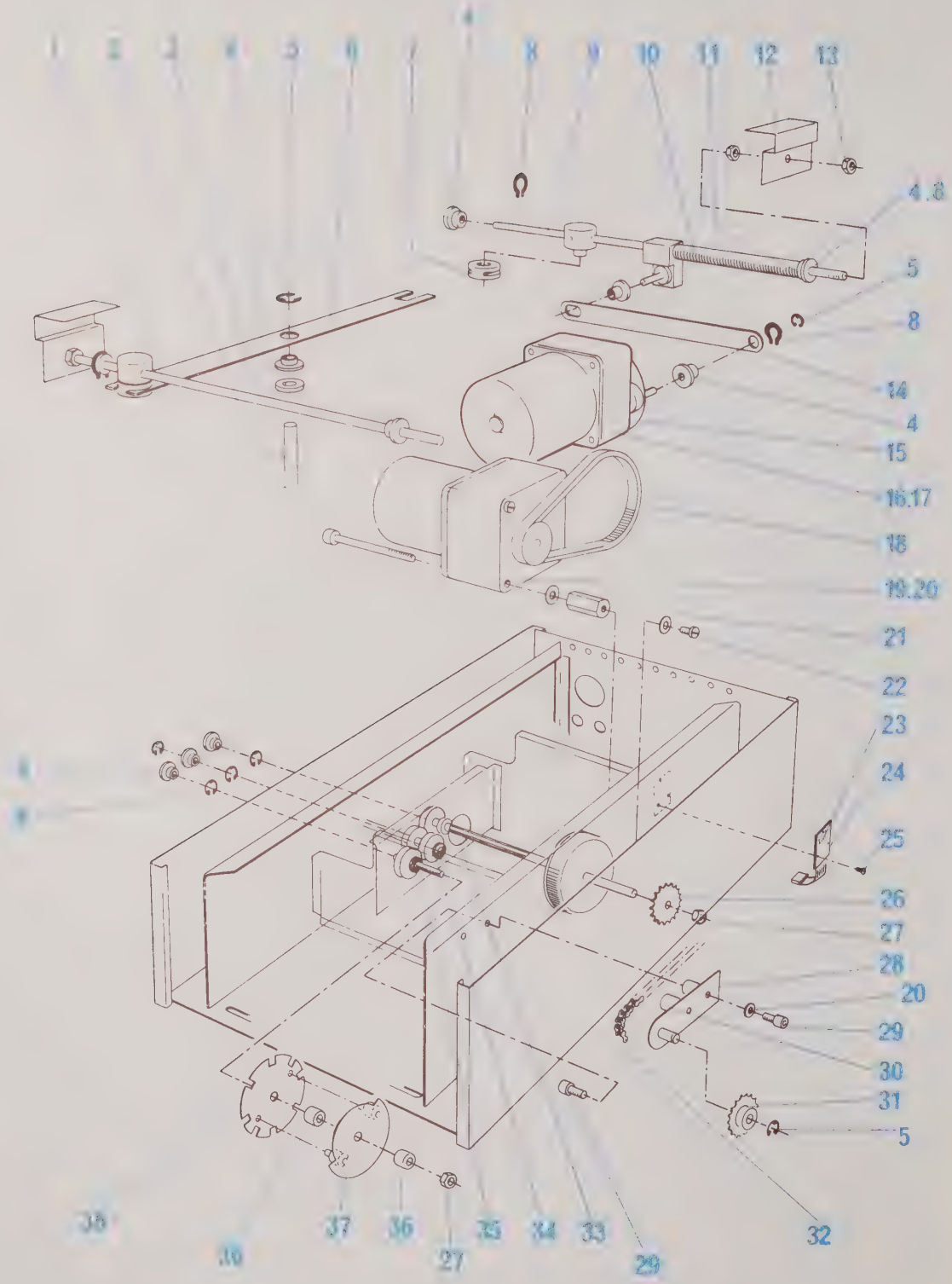
1
2
3
4
5
6
7
8
9
10
11
12
13
4.8
5
8
14
4
15
16.17
18
19.20
21
22
23
24
25
26
27
28
20
29
30
31
5
32
38
39
37
36
35
34
33
29
27

Fig.4

PUSHER,STEP MECANISM

2070-004

ITEM	PARTNO	DESCRIPTION	SUPPLEMENTARY INFORMATION
001	94 91 1388	FEED SHAFT RIGHT	
002	90 00 1512	AXLE	
003	90 00 1513	SPACER	
004	90 00 1782	BEARING	
005	95 25 0300	CIRCLIP 6	
006	93 90 2500	ARM	
007	94 91 1411	BUSHING	
008	95 25 0125	RETAINER SGA15	
009	90 00 1511	FEED SHAFT REAR	
010	90 00 1522	SPRING	
011	90 00 1525	SPRING GUIDE	
012	94 91 1410	PUSHER	
013	95 27 0362	NUT M6M8	
014	90 00 1500	CONNECTING ROD	
015	90 00 1523	APERTURE PLATE	
016	90 00 1519	MOTOR COMPL 50HZ	
017	90 00 2717	MOTOR COMPL 60HZ	
018	95 35 0090	COG BELT	
019	90 00 1520	MOTOR COMPL 50HZ	
020	90 00 2718	MOTOR COMPL 60HZ	
021	95 25 0031	WASHER BRB 4,3X10	
022	95 27 0296	SCREW SK6SS 5X12	
023	95 81 0143	SENSOR	V1,V2
024	90 00 1696	PC BOARD INCL CABLE	
025	95 27 0312	SCREW CSK B2X6	
026	94 91 1402	CHAIN WHEEL	
027	95 27 0630	NUT	
028	94 91 4775	HOLDER COMPL	
029	95 27 0235	SCREW MC6S 4X10	
030	90 00 1462	SPACER	
031	94 91 1404	CHAIN WHEEL	
032	94 92 4210	CHAIN	
033	94 91 1505	AXLE COMPL	
034	94 91 1785	AXLE COMPL	
035	94 91 1507	AXLE COMPL	
036	90 00 1582	SPACER	
037	90 00 1786	APERTURE PLATE	
038	90 00 1502	APERTURE PLATE	

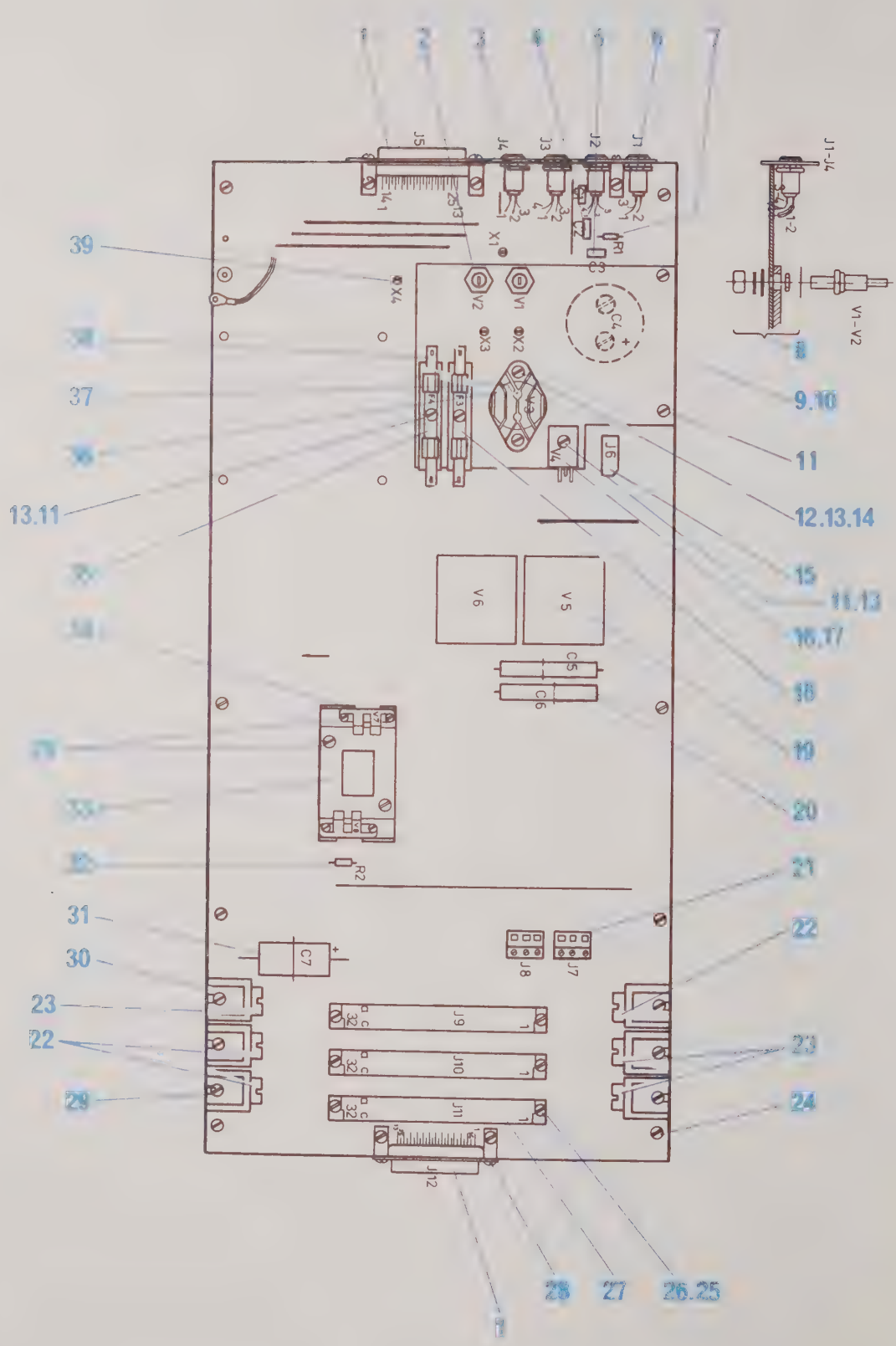
1
2
3
4
5
6
7
J5
J4
J3
J2
J1
J1-J4
1-2
V1-V2
39
38
37
36
13.11
35
34
29
33
32
31
30
23
22
29
8
9.10
11
12.13.14
15
11.13
16.17
18
19
20
21
22
23
24
28
27
26.25
1
X1
X2
X3
X4
V1
V2
V3
V4
V5
V6
V7
C2
C3
C4
C5
C6
C7
R1
R2
J6
J7
J8
J9
J10
J11
J12
32

Fig.5

INTERCONNECTION BOARD

2070-005

ITEM	PARTNO	DESCRIPTION	SUPPLEMENTARY INFORMATION
001	95 86 0502	CONNECTION DB-25S-IAON	J5,12
002	95 78 0020	DIODE	V1,2
003	95 86 0476	SOCKET	J2-4
004	95 62 0346	CAPACITOR MP 10N	C1,2
005	95 62 0166	CAPACITOR 0.1 F 100V	C3
006	95 86 0482	SOCKET	J1
007	95 60 0747	RESISTOR 180R	R1
008	95 73 0011	MOUNTING SET	
009	95 63 0202	CAPACITOR ELY 10000U	C4
010	95 27 0349	NUT M8	
011	95 27 0035	SCREW MCS 3X10	
012	95 73 0025	INSULATING BUSHING	
013	95 27 0344	NUT M3	
014	95 27 0041	SCREW MCS 3X16	
015	95 88 0092	SOCKET D1P16	J6
016	95 81 0048	REGULATOR UA7805	V4
017	95 27 0043	INSULATION BUSHING	
018	95 83 0047	FUSE 3,15A/US	F3
019	95 78 0190	RELAY	V5,6
020	95 62 0344	CAPACITOR MP 1,5U	C5,6
021	95 87 0076	TERMINAL BLOCK MK 8/3	J7,8
022	95 88 0095	GUIDE RAD 4125	
023	95 38 0019	GUIDE SPC 3000	
024	95 27 0030	SCREW MCS 3X6	
025	95 27 0020	SCREW MCS 2,5XM	
026	95 27 0352	NUT M6M 2,5	
027	95 86 0501	CONNECTION 64 POLE	J9-11
028	95 31 0119	FIXING KIT	
029	95 27 0033	SCREW MCS 3X8	
030	95 88 0094	HOLDER	
031	95 63 0165	CAPACITOR ELY 40V/1000UF	C7
032	95 60 0363	RESISTOR	R2
033	90 00 1583	HOLDER	
034	95 81 0143	SENSOR	V7,8
035	95 83 0067	FUSE 175MA US	F4
036	95 80 0018	TRANSISTOR 2N 3055	V3
037	95 73 0055	COOLING FLANGE	
038	95 88 0063	FUSE HOLDER	F1,F2
039	95 46 0150	SOLDERING LUG	X1-4

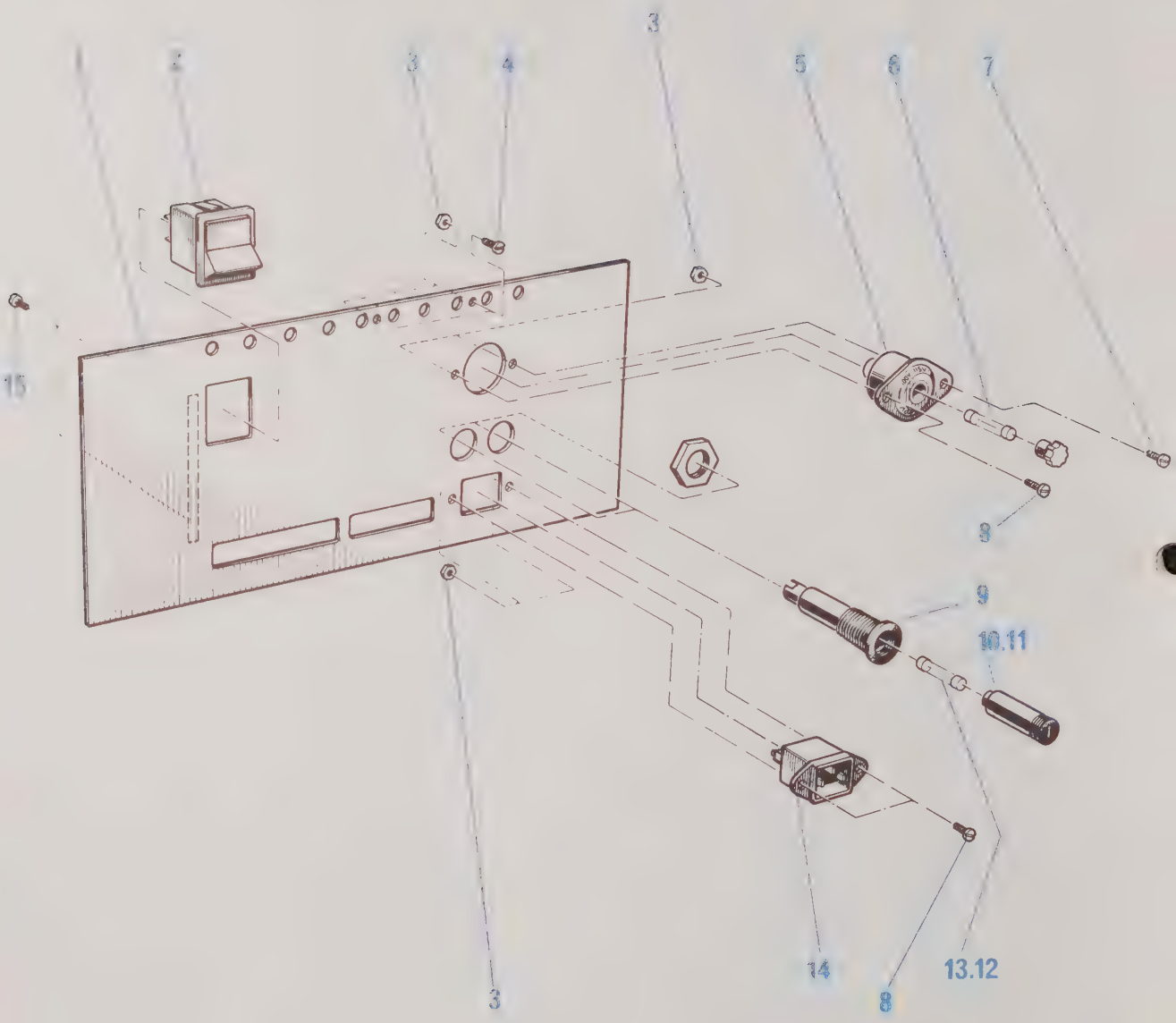

Fig.6

REAR PANEL

2070-006

ITEM	PARTNO	DESCRIPTION	SUPPLEMENTARY INFORMATION
001	90 00 1516	REAR PANEL	
002	95 84 0175	SWITCH	S1
003	95 27 0815	NUT B6LM3	
004	95 27 0114	SCREW LKCS 3X6	
005	95 84 0128	VOLTAGE SELECTOR	S2
006	95 83 0046	FUSE 16A/EU	F5
007	95 27 0122	SCREW LKCS 3X14	
008	95 27 0117	SCREW LKCS 3X8	
009	95 88 0075	FUSE HOLDER	F1,F2
010	95 88 0076	CAP EUR	
011	95 88 0077	CAP US	
012	95 83 0071	FUSE 250MA EUR	
013	95 83 0070	FUSE 500 MA US	
014	95 86 0376	MAINS SOCKET	X5
015	95 27 0056	SCREW MCS 4X6	

ACCESSORIES

2070-007

ITEM	PARTNO	DESCRIPTION	SUPPLEMENTARY INFORMATION
001	7011	RACK TRAY	
002	7024	GUIDE	
003	7018-1	TUBE RACKS	
004	7018-2	TUBE RACKS	
005	2070-101	SERVICE KIT	
006	2112-201	PUMP CONTROL CABLE	
007	95 46 0111	MAINS CABLE US	
008	95 46 0110	MAINS CABLE EU	

Reprinted in Sweden 05, 1979. (LKB)

75 04 25 Bj

For notes by LKB

Arrived .....

Estimated date of reprint .....

Proposition checked ..... by .....

Entered in the SPC manuscript ..... by .....

Please send your notifications to:

LKB-PRODUKTER AB
RESEARCH INSTRUMENTS
S-161 25 BROMMA 1
SWEDEN

I wish to have the below corrections entered in the enclosed SPC

Name of proposer ..... (readable name) .....

Department ..... Date .....

Valid for SPC part (edition) No:

Note:

		Present text / illustration			Proposed text / illustration		
Page	Item	Part No:	Description	Notes	Part No:	Description	Notes

N:9

75 04 25 Bj

For notes by LKB

Arrived .....

Estimated date of reprint .....

Proposition checked ..... by .....

Entered in the SPC manuscript ..... by .....

Please send your notifications to:

LKB-PRODUKTER AB
RESEARCH INSTRUMENTS
S-161 25 BROMMA 1
SWEDEN

I wish to have the below corrections entered in the enclosed SPC

Name of proposer ..... (readable name) .....

Department ..... Date .....

Valid for SPC part (edition) No:

Note:

		Present text / illustration			Proposed text / illustration		
Page	Item	Part No:	Description	Notes	Part No:	Description	Notes

75 04 25 Bj

For notes by LKB

Arrived .....

Estimated date of reprint .....

Proposition checked ..... by .....

Entered in the SPC manuscript ..... by .....

Please send your notifications to:

LKB-PRODUKTER AB
RESEARCH INSTRUMENTS
S-161 25 BROMMA 1
SWEDEN

I wish to have the below corrections entered in the enclosed SPC

Name of proposer ..... (readable name) .....

Department ..... Date .....

Valid for SPC part (edition) No:

Note:

		Present text / illustration			Proposed text / illustration		
Page	Item	Part No:	Description	Notes	Part No:	Description	Notes

LKB

Stockholm · Athens · Copenhagen · Ghent · The Hague
Hong Kong · London · Munich · Paris · Rome · Turku · Vienna
Washington · Representatives in 50 countries.